PHOS 20/40 downlight

OWNER'S MANUAL

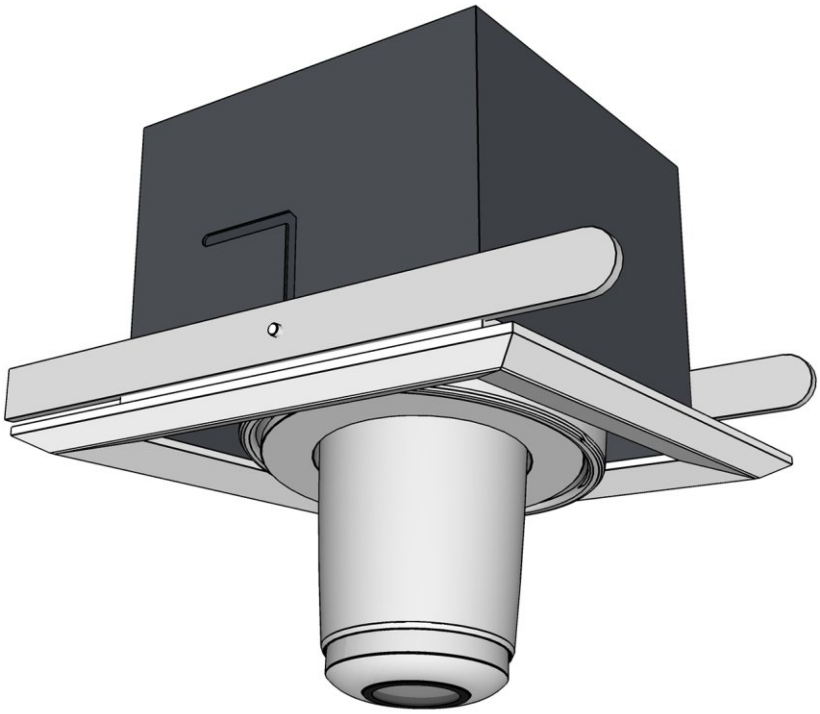

derksen®
lichttechnik

TABLE OF CONTENTS

Safety Instructions **4**
- Electrical Safety 4
- Lamp Safety 4
- Burns and Fire Safety 5
- Safety During Installation And Operation 5

Technical Overview **6**
- Ceiling Housing 6
- Projector With Electronic Ballast And Connection Cable 7

Ceiling Installation **8**

Setting Up **12**
- Inserting The Gobo 12
- Adjusting The Projected Image 14

Cleaning, Repair **15**

Specifications PHOS 20 downlight **16**
- Configuration 16
- Dimensions 17
- Projection Size Chart 17

Specifications PHOS 40 downlight **18**
- Configuration 18
- Dimensions 19
- Projection Size Chart 19

OWNER'S MANUAL

Thank you for deciding to purchase this high quality product. The PHOS 20/40 downlight projector
is produced exclusively in Germany and meets the highest standards of quality and safety. We hope you enjoy many fascinating hours with your new LED projector! To use the device effectively and safely, please read this operating instruction carefully first!

Packungsinhalt:

- LED Projector PHOS 20 downlight or PHOS 40 downlight
- electronic ballast
- ceiling housing
- owner's manual

These optional accessories are available:

- Glass gobos, custom made according to your specifications

WARNING!
Read the safety instructions
before operating the appliance or performing maintenance.

SAFETY INSTRUCTIONS

ELECTRICAL SAFETY

- Always make sure that the connecting line is volt-free before connecting the device!
- The device may only be connected by a qualified electrician. Please refer to the installation instructions.
- The power cord must not be damaged. Ensure no strain or pressure is put on the power cord. The power cord should not be bent, stretched, twisted or pinched. A damaged power cord can cause electric shock or fire and must be replaced immediately.
- Verify that the voltage of the electricity supply system and the voltage of the device are compatible. To this end take note of the type label on the projector.
- Operate the unit only when completely assembled.
- The device may only be used in dry, closed rooms. Do not operate the device in a humid environment or near dripping or splashing water.
- If, despite all precautions, liquid is spilled into the unit, it must immediately be disconnected from the mains. Do not touch the housing - ingress of liquids may cause an electric shock! Turn on the power again, if you are sure that the device is thoroughly dried.

- If you hear unusual noises, see smoke or strong odor strikes, pull the power plug immediately and contact your technical service. Continued use could result in electric shock or fire.

LAMP SAFETY

- As with any bright light source, do not look directly into the light beam of the LED! The projector complies with the European standard EN62471-5 and is classified as RG-2 (Risk Group 2) device.

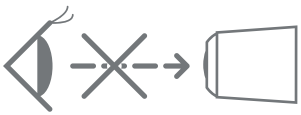

BURNS AND FIRE SAFETY

- Do not operate the unit near easily flammable substances such as alcohol or benzine.
- Keep a safe distance of at least 0.3 m between the light emission at the front lens and combustible materials and surfaces.
- Avoid touching the hot device during operation. Turn the unit off and let it cool at least 10 minutes before servicing the unit or changing the gobo.

- The device is designed for normal room temperature. High ambient temperatures or direct sunlight may damage the unit.
- Make sure that the device is adequately supplied with fresh air, so that it does not overheat. Never cover the projector with objects or insulating material.
- When the device is installed in a closed wall, ceiling or cabinet, ensure a sufficient supply of fresh air.

SAFETY DURING INSTALLATION AND OPERATION

- Ensure that the supporting structure, such as ceiling, curtain wall or truss system, can carry at least four times the weight of the device, so at least 11.8 kg (PHOS 20 downlight) and 13.2 kg (PHOS 40 downlight). Observe the local safety regulations!
- Always use the appropriate mounting accessories according to the local conditions, such as anchors, screws, etc.
- Make sure that the lens tube and lens are attached firmly so that they can not fall down.
- Use only genuine accessories and spare parts from Derksen Lichttechnik, which have been specially developed for use with the device. Use only glass gobos, metal gobos or special color slides as projection templates.
- Do not alter, disassemble, or otherwise damage the projector, since otherwise it will no longer meet the safety requirements.

TECHNICAL OVERVIEW

1. CEILING HOUSING

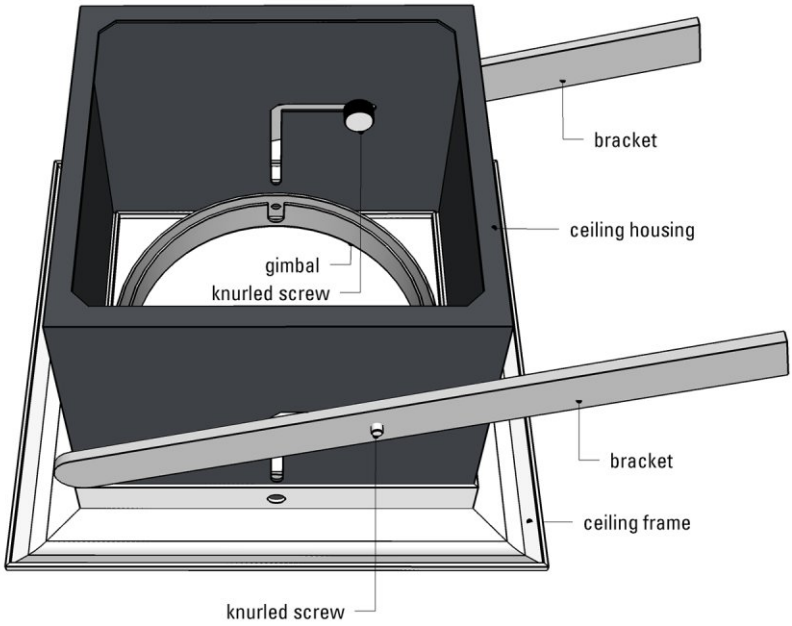

2. PROJECTOR WITH ELECTRONIC BALLAST AND CONNECTION CABLE

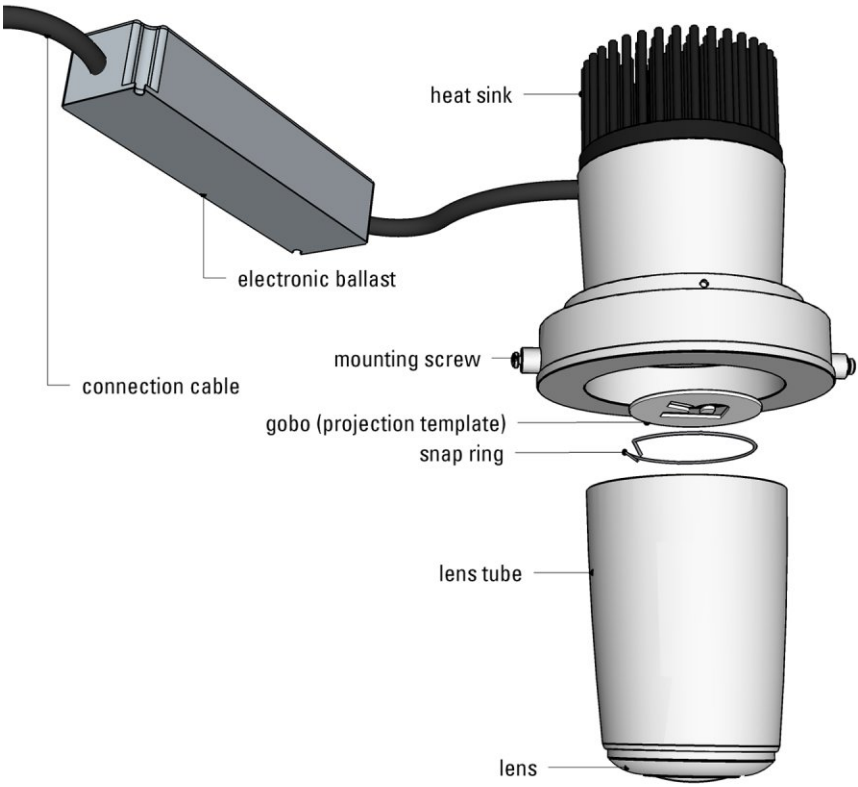

CEILING INSTALLATION

Step 1:

Cut in the ceiling a square opening with the dimensions 165 x 165 mm.

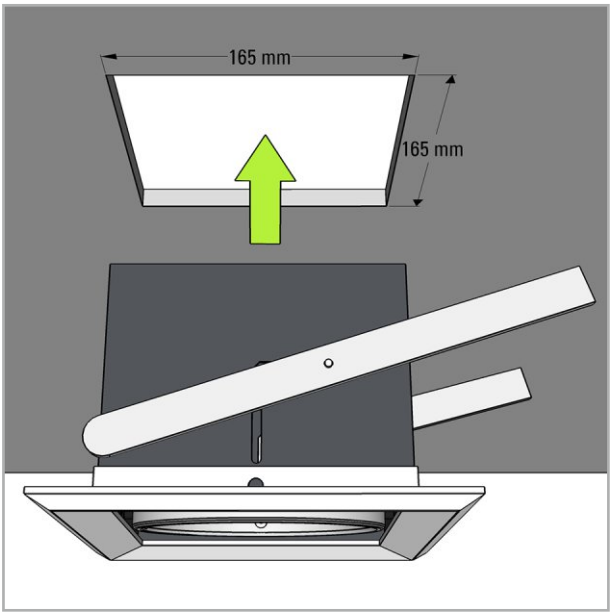

Step 2:

Insert the ceiling housing without projector slightly inclined into the cutout. Make sure that the brackets are inclined and positioned at the upper end of the slot.

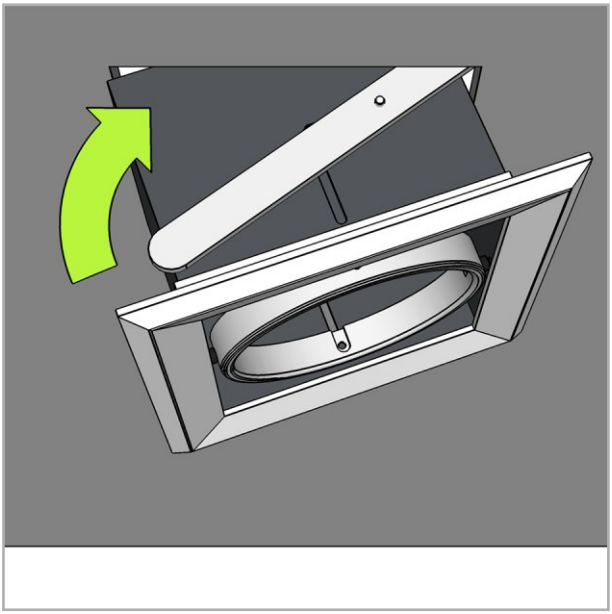

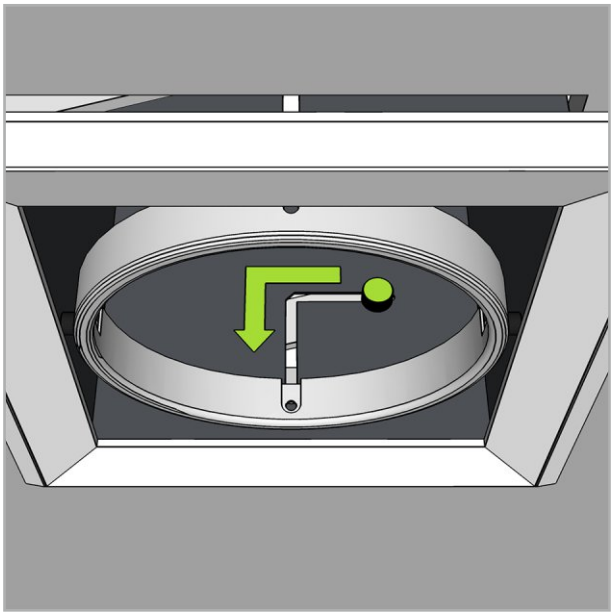

Step 3:

Insert your hand through the opening and loosen the knurled screw. Slide the bracket with the knurled screw to the lower end of the slot.

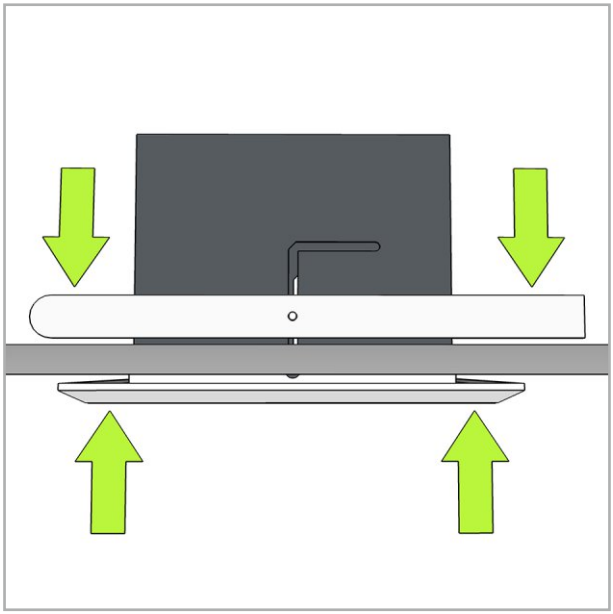

Step 4:

Hold the knurled screw and press the bracket firmly onto the ceiling panel. Press the frame firmly into the ceiling cutout.

Step 5:

Fasten the knurled screw carefully with your hand. Repeat the process for the opposite side.

Step 6:

First, the electrical connection must be made. Then insert the ballast with the connection cable through the opening of the ceiling housing and place it in the ceiling.

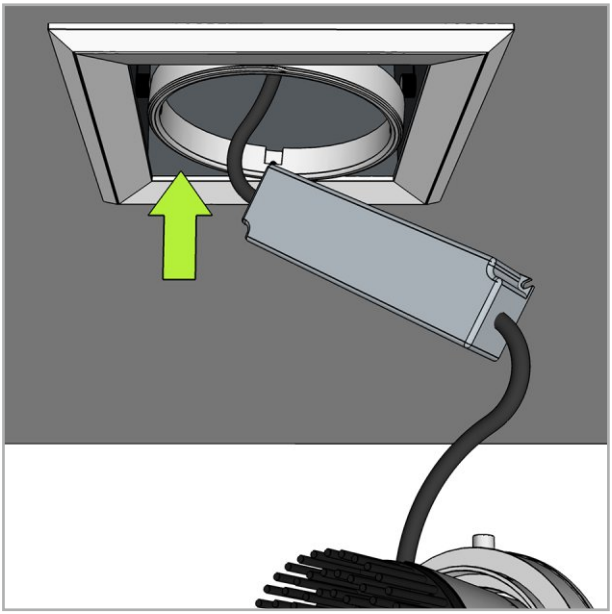

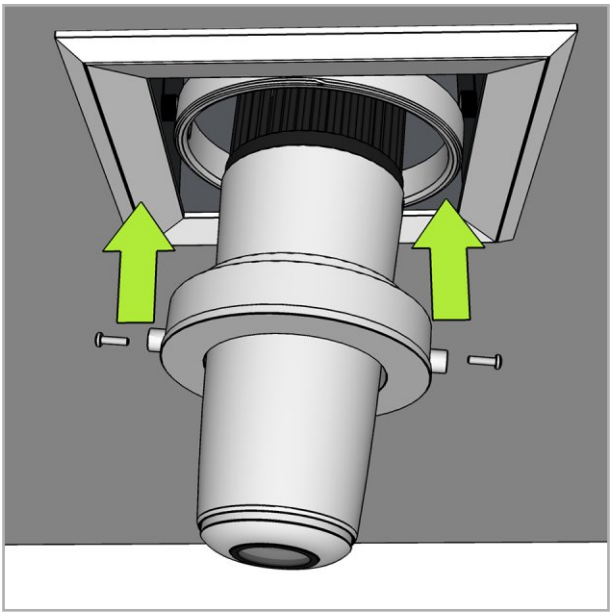

Step 7:

Push the projector through the ring of the ceiling housing. The two axes need to be positioned in the grooves on the inside of the ring.

Step 8:

Fix the projector in the gimbal system of the ceiling housing with the two screws. For this, a Phillips screwdriver is required.

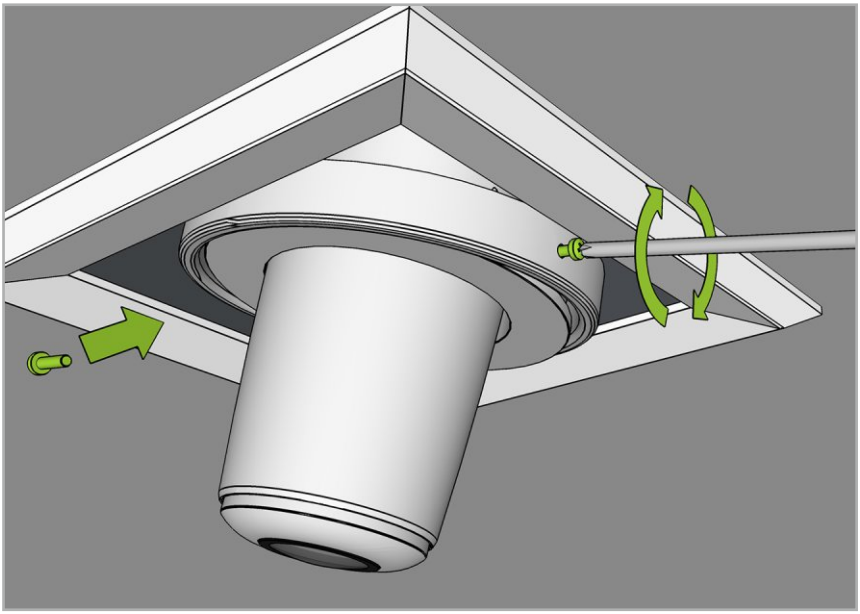

SETTING UP

Step 1:

Switch off the projector. Turn the lens tube counterclockwise and remove it from the system.

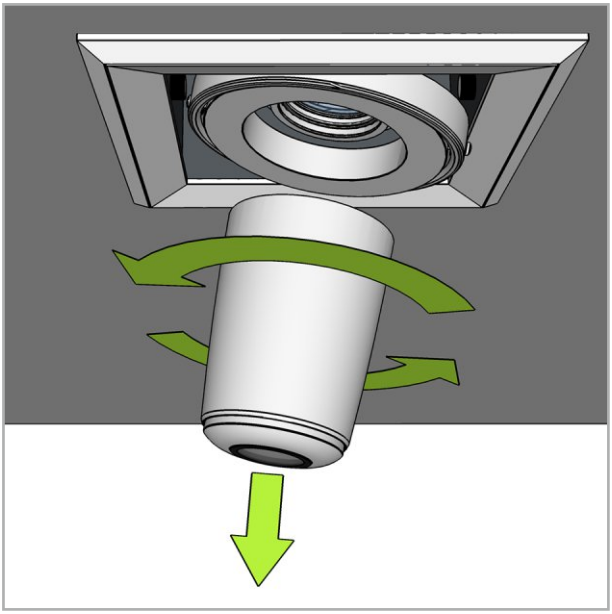

Step 2:

Insert the gobo in the aperture of the projector.

Place the snap ring in the aperture, while squeezing it slightly.

Push in the snap ring until it fixes the gobo.

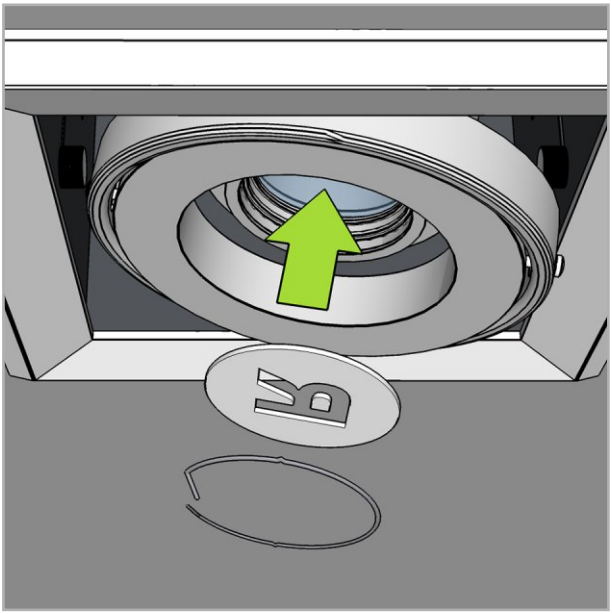

How to place in a gobo correctly:
The coated side should face to the light source, the motif should be upside down.

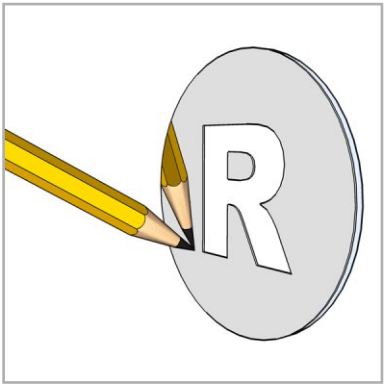

Coated side: *the object is reflected directly and without a gap. The coated side should face the light source.*

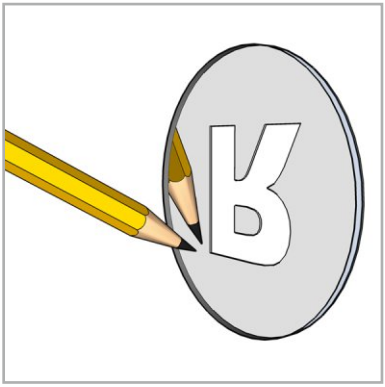

Glass side: *there is a small gap between the object and its reflection. The glass side should face the lens.*

- Put the lens tube on the projector and turn it clockwise until it is firmly attached.
- Switch the device on and align the projected image.
- Focus the projected image by turning the lens in the lens tube forward or backward (step 4).
- Eventually you need to align the projected image by rotating the gobo (step 3). Therefore, the lens tube must be removed again.
- Allign the projector head. The pivot range is 15° in two axes

Step 3:

Rotate the gobo to align the projected image.

Step 4:

Switch on the projector.

Focus the projected image by turning the lens.

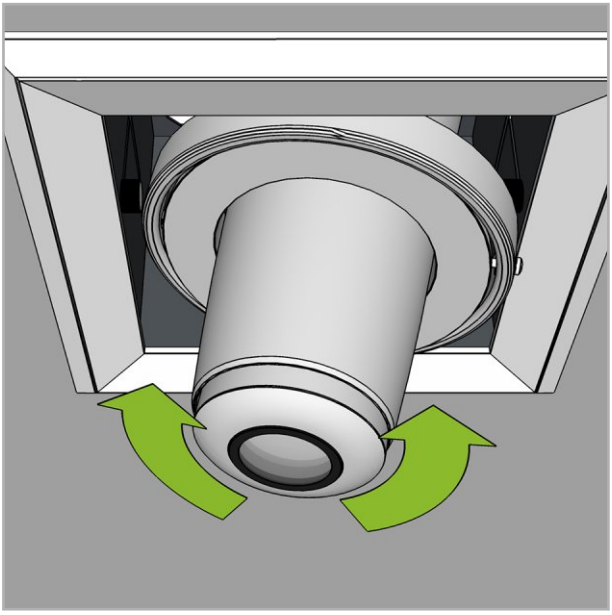

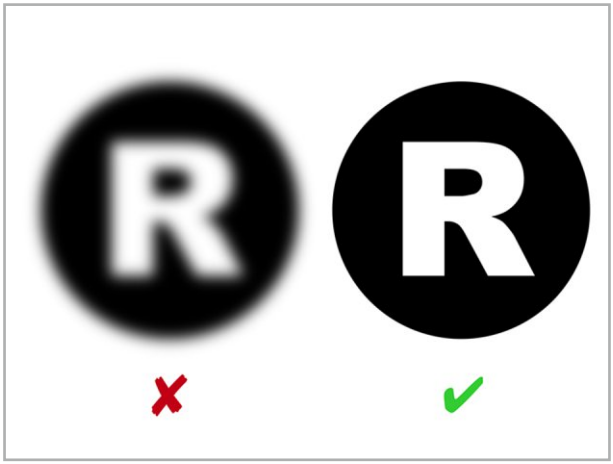

Focus the projected image, until you have achieved an optimal result.

CLEANING, REPAIR

- Clean the device only from the outside with a soft cloth. Do not use strong detergents or solvents such as alcohol or benzine.
- Use only optical cleaning cloths to clean the front lens.
- Repairs and cleaning of the inside may only be performed by a qualified service technician.
- Devices can be returned for service or repair directly to Derksen Lichttechnik GmbH. Transport and ship the device in its original packaging. If this is not available anymore, you can use a cardboard box with adequate padding on the inside.
- Only use genuine spare parts from Derksen Lichttechnik.

SPECIFICATIONS PHOS 20 DOWNLIGHT

item:..... PHOS 20 downlight
housing:.....aluminium
weight:.....2.95 kg
available colours:.....silver, white
environmental conditions:..... for dry indoor environmants only, ceiling mount
pivot range:.....ca. 15°, 2 axis
cooling:..... passive, noiseless
light source:..... 20 W High Power LED
recommended projection distance in normal room light:.....3 m
recommended projection distance in darkness:.....6 m
average lifetime of the LED:.....35,000 operating hours
colour temperature:..... 6,500 - 8,000° Kelvin
luminous flux of the LED:..... 1,700 lumens
gobo size / image size:.....50 mm / 35 mm
input voltage:.....100 - 240 V AC / 50 - 60 Hz
active power (power consumption):.....26 W
apparent power:..... 37 VA
efficiency: ..... 0.7 cos. φ
electrical protection:..... protection class II
ingress protection rating:..... IP 20
photobiological safety according to ICE62471:2006 EN62471:2008:..... RG-2
item number:
silver.....20001630
white.....20001610

CONFIGURATION

Standard series with high power LED, 85 mm standard lens, ceiling housing, electronic ballast with connection cable. Required accessories: glass gobo with individually designed motif.

CE IP 20

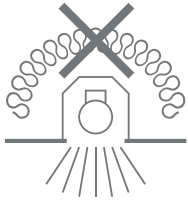

Dimensions

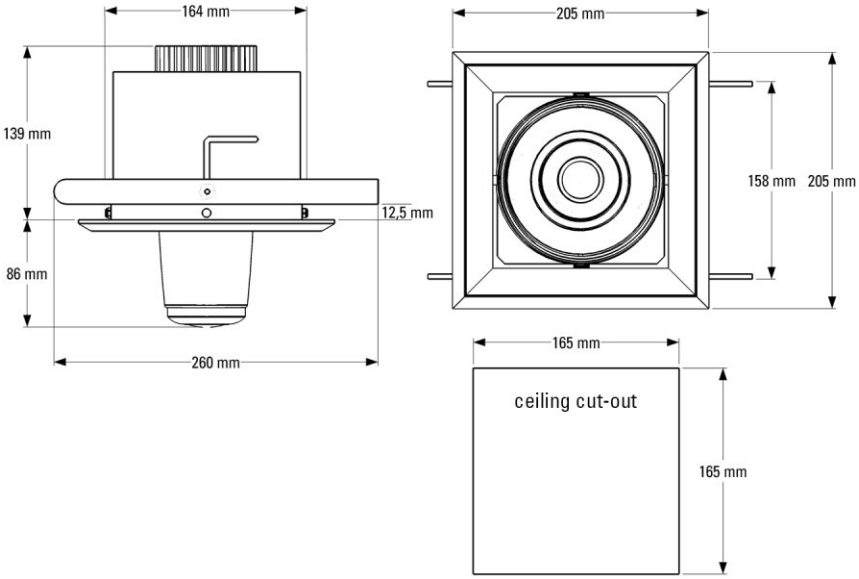

Projection diameter with increasing distance

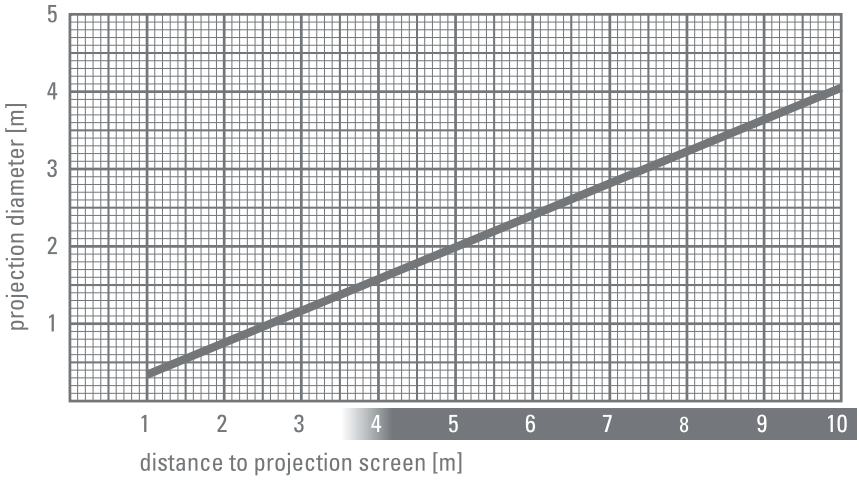

We reserve the right to make technical and optical modifications.
Our general terms and conditions apply.

SPECIFICATIONS PHOS 40 DOWNLIGHT

item:..... PHOS 40 downlight
housing:.....aluminium
weight:.....3.3 kg
available colours:.....silver, white
environmental conditions:.....for dry indoor enviroments only, ceiling mount
pivot range:.....ca. 15°, 2 axis
cooling:..... active ventilation
light source:..... 40 W High Power LED
recommended projection distance in normal room light:.....4 m
recommended projection distance in darkness:.....10 m
average lifetime of the LED:.....35,000 operating hours
colour temperature:..... 6,500 - 8,000° Kelvin
luminous flux of the LED:..... 2,700 lumens
gobo size / image size:.....50 mm / 42 mm
input voltage:.....110 - 127 V AC / 220 - 240 V AC, 50 / 60 Hz
active power (power consumption):.....46 W
apparent power:..... 54 VA
efficiency: ..... 0.85 cos. φ
electrical protection:..... protection class II
ingress protection rating:..... IP 20
photobiological safety according to ICE62471:2006 EN62471:2008:..... RG-2
item number:
silver.....20001730
white.....20001710

CONFIGURATION

Standard series with high power LED, 85 mm standard lens, ceiling housing, electronic ballast with connection cable. Required accessories: glass gobo with individually designed motif.

CE IP 20

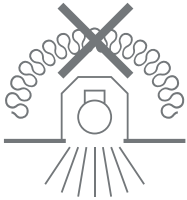

Dimensions

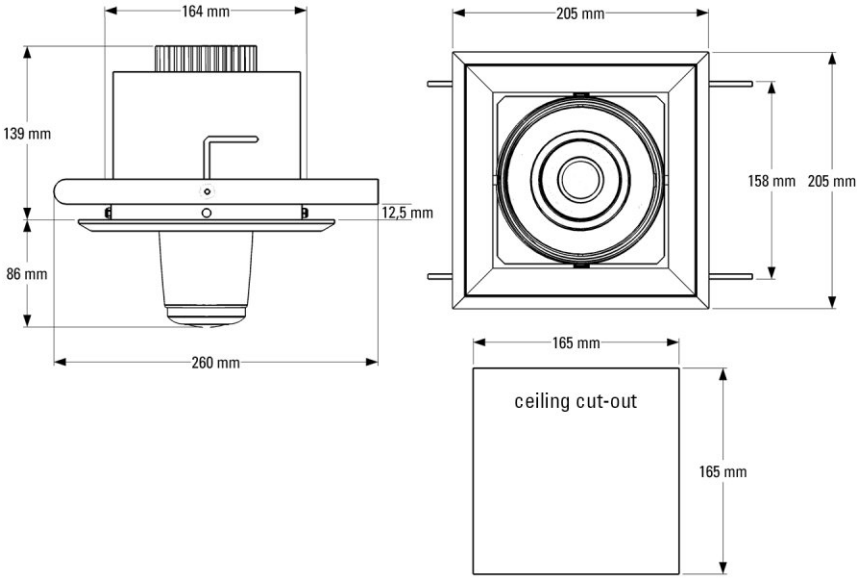

Projection diameter with increasing distance

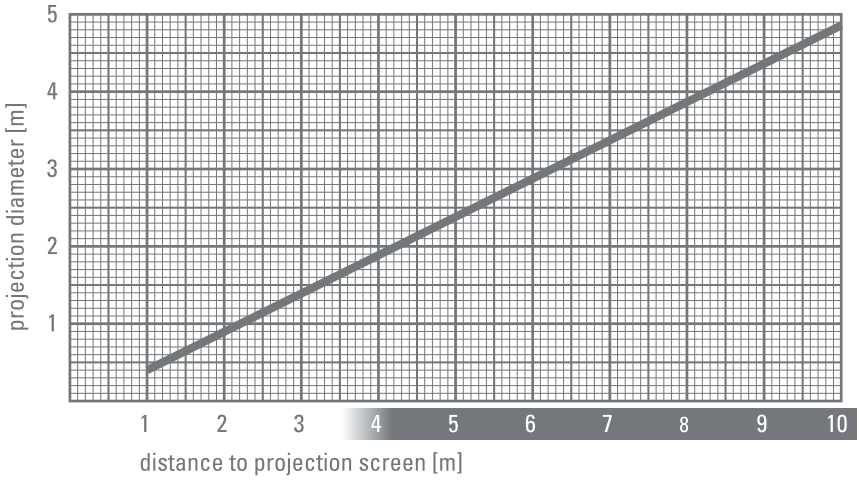

We reserve the right to make technical and optical modifications.
Our general terms and conditions apply.

derksen®
lichttechnik

Derksen Lichttechnik GmbH
Sauerlandstraße 5
45889 Gelsenkirchen
Germany

Telefon: +49 (0) 2 09 / 9 80 70-0
Telefax: +49 (0) 2 09 / 9 80 70-60

info@derksen.de
www.derksen.de